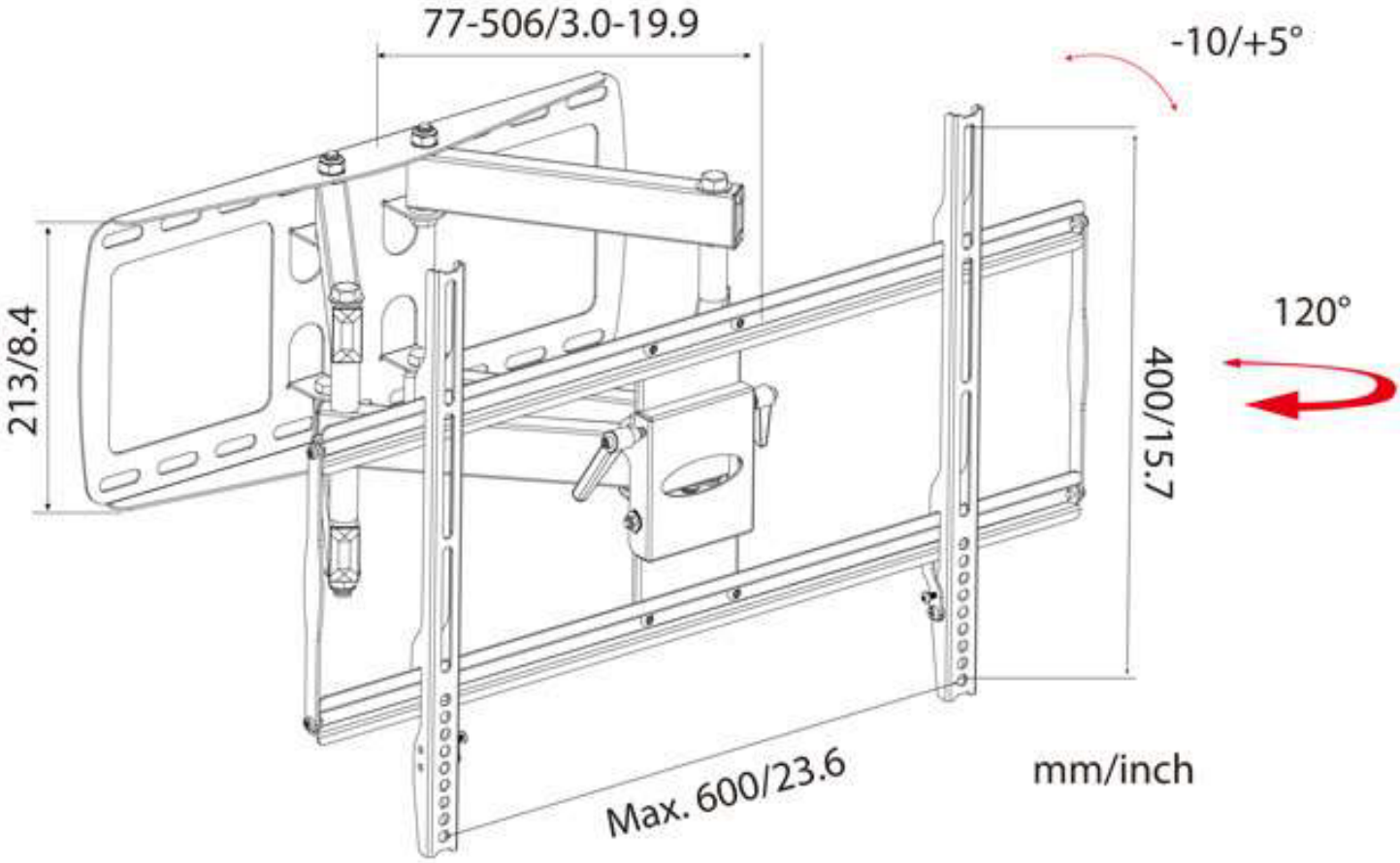
77-506/3.0-19.9
-10/+5°
213/8.4
120°
400/15.7
Max. 600/23.6
mm/inch

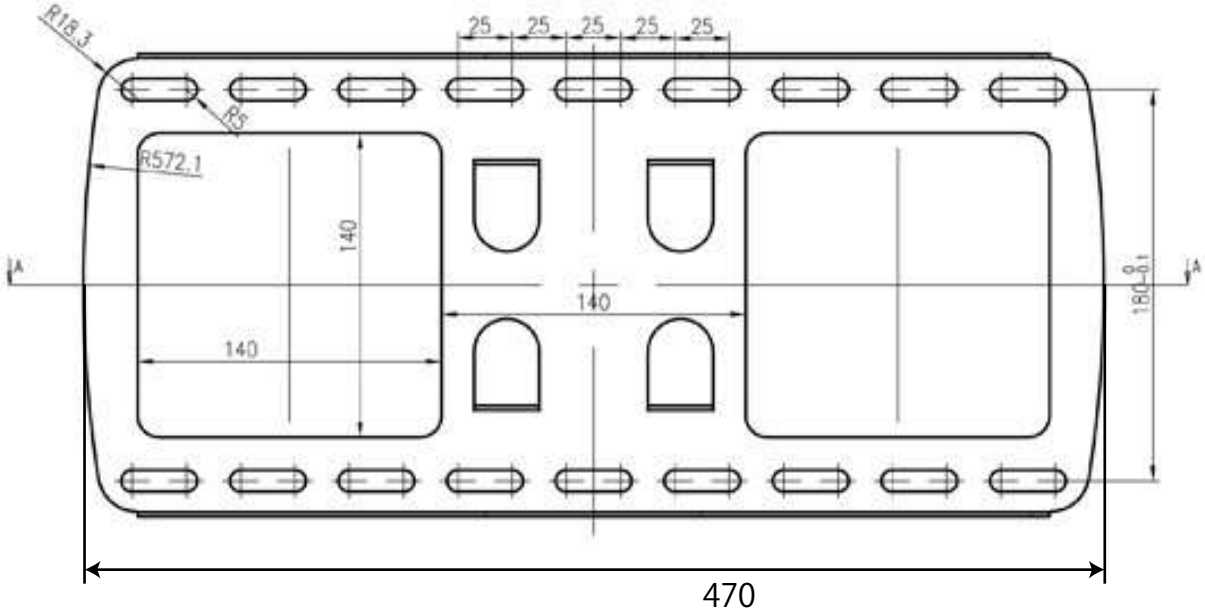
R18.3
R5
R572.1
25
25
25
25
25
140
140
140
A
A
180
470