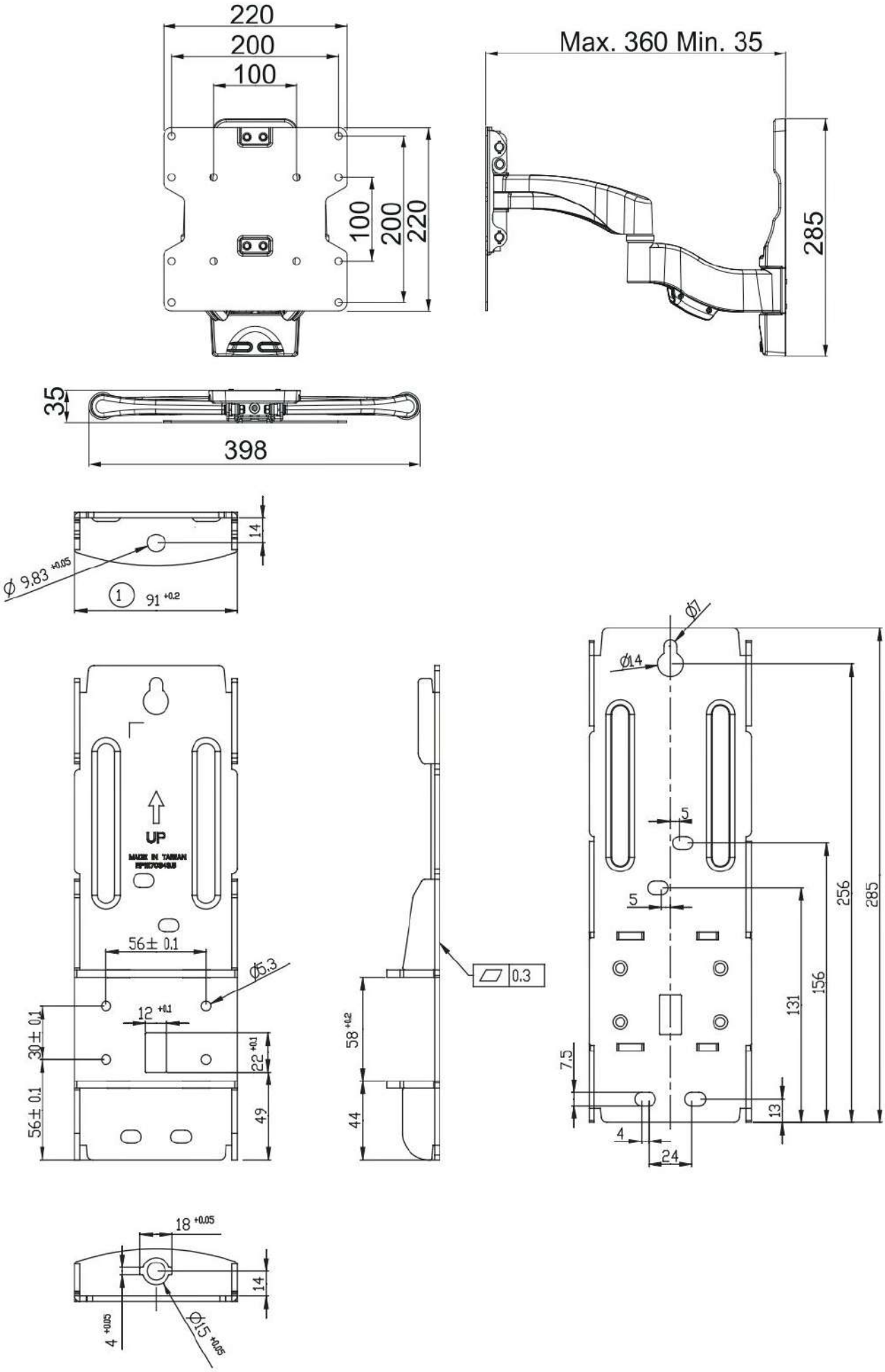
220
200
100
100
200
220
Max. 360 Min. 35
285
35
398
14
Ø 9.83 +0.05
1
91 +0.2
UP
MADE IN TAIWAN
56± 0.1
Ø5.3
12 +0.1
30± 0.1
22 +0.1
56± 0.1
49
0.3
58 +0.2
44
Ø7
Ø14
5
5
256
285
156
131
7.5
13
4
24
18 +0.05
14
4 +0.05
Ø15 +0.05

AE422